# Installation Instructions

# Connector Attachment

## For Braided Cable CNT-400 & C2FP
## N Female, Captivated Pin, Clamp-type Body: 400PNF-C

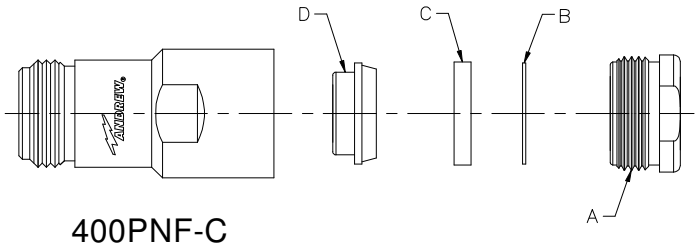


400PNF-C

**1** Remove 6.50 mm (0.256") of Jacket only.

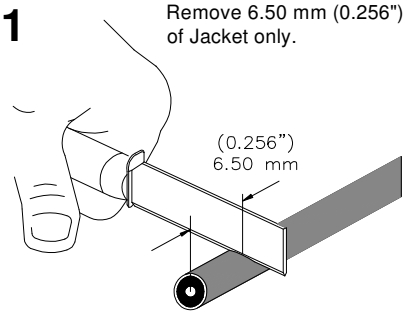


**2** Slide parts A, B, C onto the cable.
Note: the direction of part C as shown.

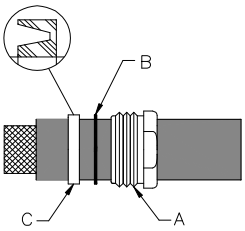


**3** Comb braid.
Note: braid to be straight after comb.

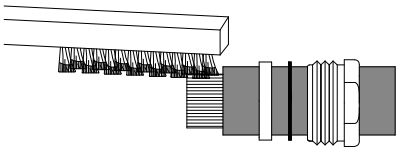

**4** Make the braid small and sharp at the front; install part D and stop as shown.

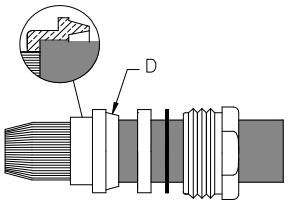


**5** Fold braid around part D and comb braid as shown, the braid should be straight and equally spaced after comb.

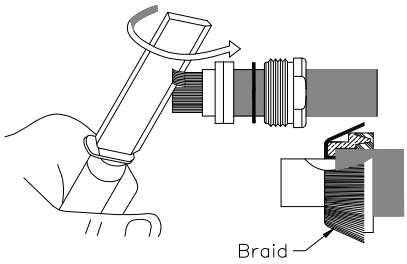


**6** Cut off the redundant braid as shown.

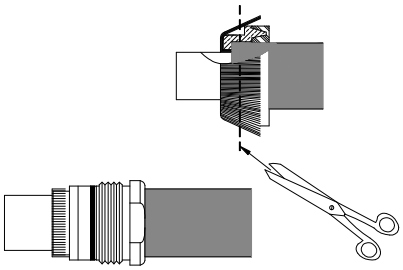

**7** Trim off 5.00 mm (0.197") foam along the braid as shown, clean up foam from the center conductor.

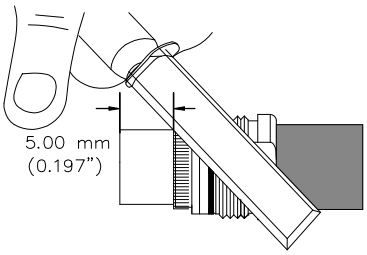


**8** Note: The foam couldn't protrude from braid. Chamfer the center conductor at a 45° angle.

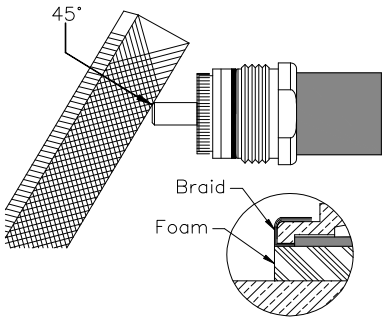


**9** The cable center conductor must be straight and aligned with the connector inner contact. Insert the cable attachment into the connector body until stopped; the center conductor must be inserted into the connector inner contact fingers. Tighten the connection to the torque value of 44-53 lb-in (5.0-6.0 N.m).
Note: Do not turn connector body, turn clamp nut attachment.

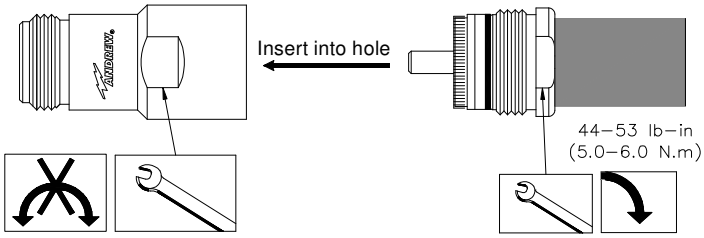


***Installation Training Available at Andrew Institute***

Notice: Andrew disclaims any liability or responsibility for the results of improper or unsafe installation, inspection, maintenance, or removal practices

**Andrew Corporation**
*10500 West 153rd Street*
*Orland Park, IL U.S.A. 60462*
*Telephone: 708/349-3300*
*FAX (U.S.A.): 1-800/349-5444*
*Internet: http://www.andrew.com*
*Customer Service, 24 hours: U.S.A * Canada * Mexico: 1-800/255-1479*
*U.K.: 0800 250055*
*Other Europe: +44 592 782 612*

Copyright © 2006 by Andrew Corporation